1 Introduction

VISION ACCESS™ Face Reader (FR) is part of the A4Vision's 3D Face recognition technology that is designed to work with software that is built over VISION ACCESS™ Software Development Kit (or for demonstration purposes to be used with the VA Enrollment Application).

> **Note**
>
> VISION ACCESS™ Software Development Kit (VA SDK) is a professional software kit for designing, developing and implementing access control systems (ACSs) based on A4Vision's 3D Face Recognition technology: For detailed information, refer to "VA SDK User Manual."
>
> The VA Enrollment Application is intended to provide customers dealing with integration of biometric and security solutions with testing facilities (software and hardware means) to evaluate the A4Vision's 3D facial recognition technology. For more information on the VA Enrollment Application, refer to "VA Enrollment Application User Manual."
>
> Working in invisible near-infrared light, the VA FR is a 3D face capture device operating in both identification and verifications modes of a typical access control system (ACS) the implementation of which based on the VA SDK.

This introductory section contains information on the following subjects:

- About This Document
- Face Reader Overview.

This document provides step-by-step instructions on how to install and connect the VA FR to the FR Controller computer.

1.1 About This Document

The VA Face Reader Installation Manual provides an overview of the installation of the FR as a baseline part of an access control system (ACS) designed and implemented with the solutions provided by the A4Vision's 3D Face Recognition technology (see "VA SDK User Manual."). This manual describes step-by-step instructions on how to install and connect the FR.

In addition, a complete glossary of the VA SDK and FR terms is included.

Readers are expected to be familiar with installing and configuring hardware and software.

1.2 Face Reader Overview

The Face Reader (FR) is a shorthand of the VISION ACCESS™ Face Reader Optical Unit (FRO)—a 3D surface scanner device providing a real-time capture of 3D facial biometric data for matching the data against information stored in the corresponding local database or on the card of a person exposing his/her face to the FR..

The FRO is not a standalone device, it works in conjunction and with support of the FR Controller (FRC)—a dedicated computer supporting the FR operation as part of a Vision Access™ Control System (VACS) solution based on A4Vision technology.

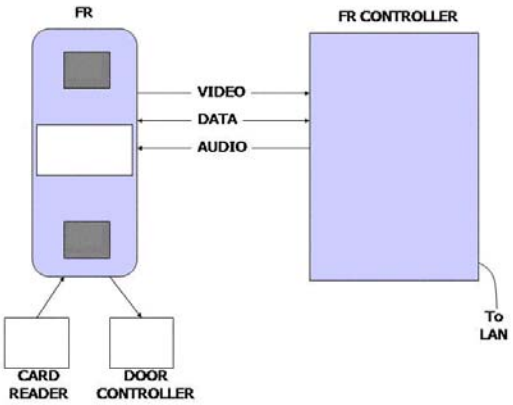

With the help of the video, audio and data interface (RS485) the FR is connected the FR Controller. The FR can receive the Wiegand input from a card reader and can send data through the Wiegand interface to a Door Controller. The FR Controller computer can be connected to LAN for being managed through the VA Connection protocol.

Note

RS485 is an Electronics Industry Alliance (EIA) standard for multipoint communications. It supports several types of connectors, including DB-9 and DB-37. RS-485 is similar to RS-422 but can support more nodes per line because it uses lower-impedance drivers and receivers.

Weigand™ is the trade name for a technology used in card readers and sensors, particularly for access control applications. A Wiegand interface is physically implemented as five conductors of which two, white and green, are used to send binary data, ones and zeros respectively. The normal state of a typical Wiegand conductor is +5V DC. The voltage drops below +1.7V DC signifies a single bit. When the voltage returns above +2.8V DC, the bit is complete and the conductor returns to its normal state. The voltage is measured against the third wire, black, referred as "Common or Data Return."

2 Mounting FR

The VA FR can be mounted on a wall near a door passage through which has to be secured. Fig. 2.1 through 6 provide you with some basic information about where and how a typical VA FR should be mounted.

As shown in Fig. 4.1, the FR and a person are typically positioned so that its light at its best focus distance covers the face of a person with height of 1.60 through 1.95 meters.

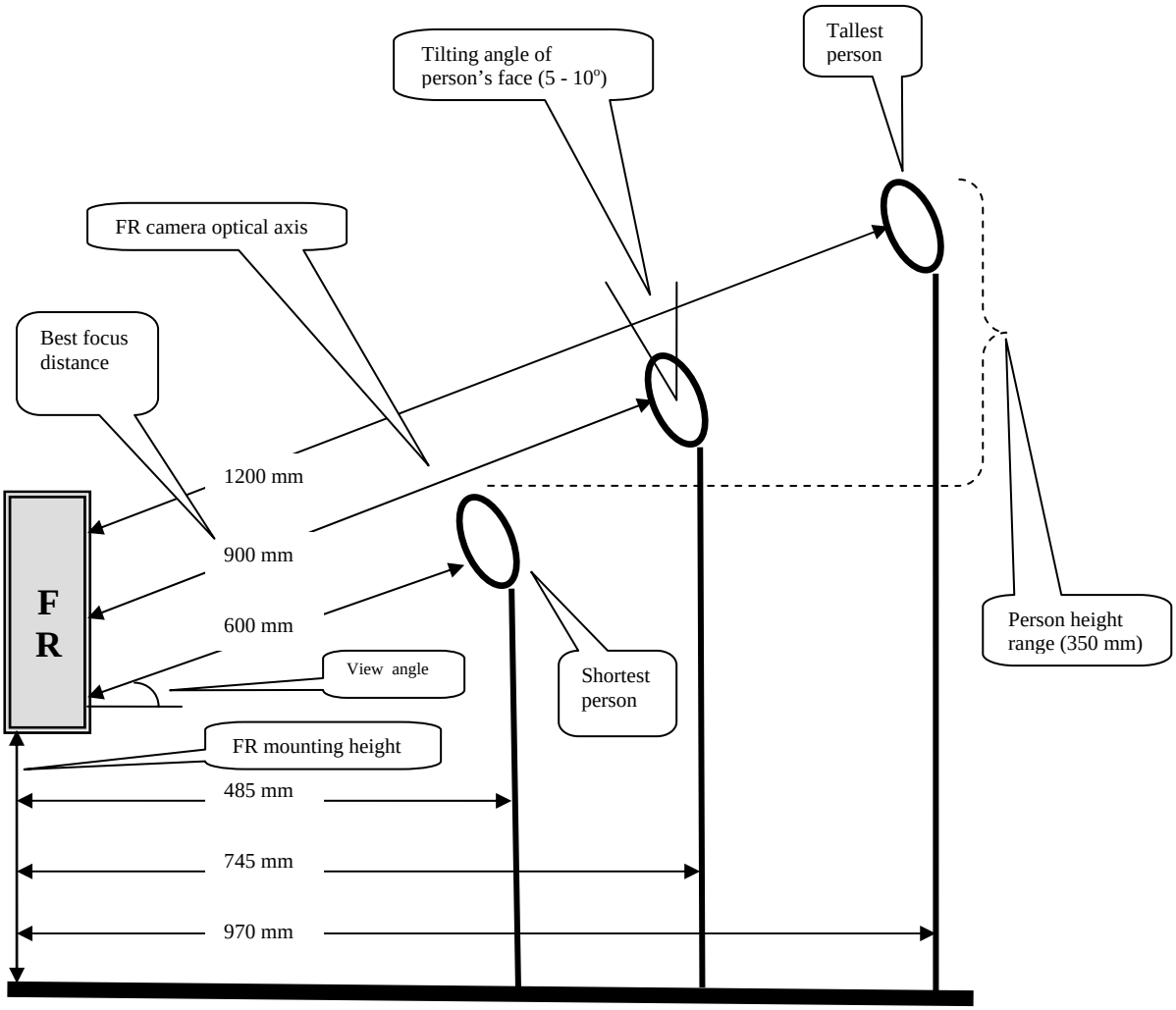

Fig. 4.1 Relative position between FR and a person.

In general, to ensure that the FR will cover the face of a person of a specific height, the following rule should be applied:

1. The mounting height of FR bottom is

   MH = SPH - 600*SIN(VA) – 0.5*PHH

   where

   SPH is the height of the person shortest in a group

   PHH is the height of person's head in average

VA is the FR view angle (see Fig. 4.1).

2. The height of the tallest person is equal to the height of shortest person plus the person height range (350 mm).

3. A typical FR mounting height is 870-1200 mm from floor to the FR base.

4. The best focus distance between FR and the person's face is 900 mm along the FR camera optical axis.

Note

Remember that direct light sources (sunlight through a nearby window, powerful electrical lamps, etc.) in view of the FR or those illuminating the visitor's face can reduce the efficiency of the face recognition performance.
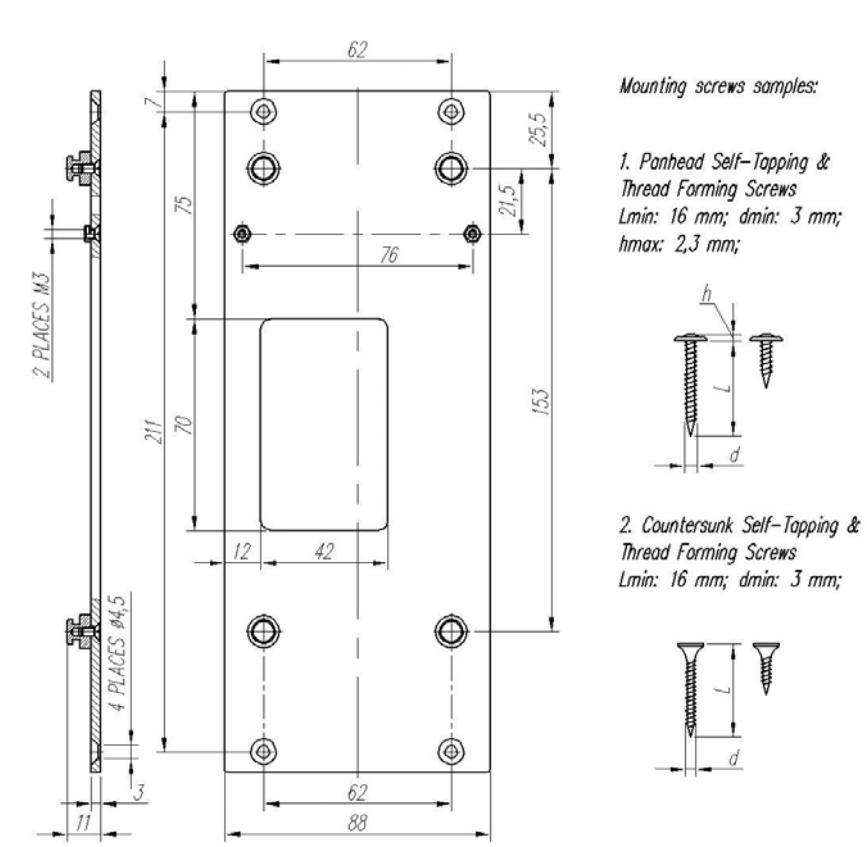
The figure below shows the drawing of the mounting plate that can be place on a wall with proper screws. The plate has 4 bayonet hooks.